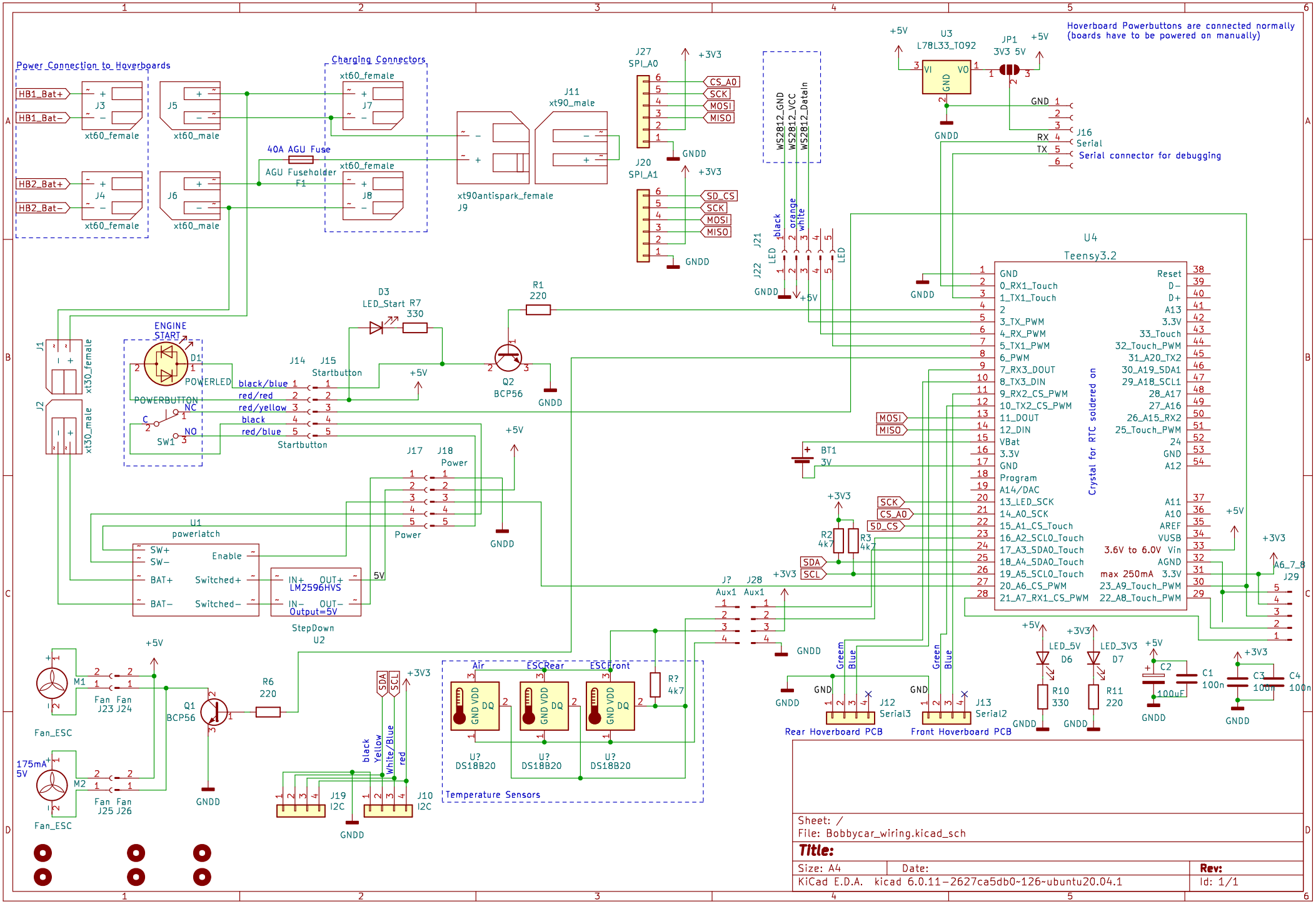
Power Connection to Hoverboards
HB1_Bat+
HB1_Bat−
HB2_Bat+
HB2_Bat−
J3
J4
xt60_female
J5
J6
xt60_male
Charging Connectors
J7
J8
40A AGU Fuse
AGU Fuseholder
F1
J11
xt90_male
xt90antispark_female
J9
J27
SPI_A0
J20
SPI_A1
CS_A0
SCK
MOSI
MISO
SD_CS
GNDD
+3V3
WS2812_GND
WS2812_VCC
WS2812_DataIn
J21
J22
black
orange
white
LED
U3
L78L33_TO92
JP1
3V3 5V
+5V
Hoverboard Powerbuttons are connected normally
(boards have to be powered on manually)
GND
RX
TX
J16
Serial
Serial connector for debugging
U4
Teensy3.2
Crystal for RTC soldered on
3.6V to 6.0V Vin
max 250mA 3.3V
Reset
D−
D+
A13
3.3V
33_Touch
32_Touch_PWM
31_A20_TX2
30_A19_SDA1
29_A18_SCL1
28_A17
27_A16
26_A15_RX2
25_Touch_PWM
24
A12
A11
A10
AREF
VUSB
AGND
23_A9_Touch_PWM
22_A8_Touch_PWM
0_RX1_Touch
1_TX1_Touch
3_TX_PWM
4_RX_PWM
5_TX1_PWM
6_PWM
7_RX3_DOUT
8_TX3_DIN
9_RX2_CS_PWM
10_TX2_CS_PWM
11_DOUT
12_DIN
VBat
Program
A14/DAC
13_LED_SCK
14_A0_SCK
15_A1_CS_Touch
16_A2_SCL0_Touch
17_A3_SDA0_Touch
18_A4_SDA0_Touch
19_A5_SCL0_Touch
20_A6_CS_PWM
21_A7_RX1_CS_PWM
BT1
3V
R2
4k7
R3
4k7
SDA
SCL
J29
A6_7_8
J1
J2
xt30_female
xt30_male
ENGINE
START
D1
POWERLED
POWERBUTTON
NC
NO
C
SW1
J14
J15
Startbutton
black/blue
red/red
red/yellow
black
red/blue
D3
LED_Start
R7
330
R1
220
Q2
BCP56
J17
J18
Power
U1
powerlatch
SW+
SW−
BAT+
BAT−
Enable
Switched+
Switched−
LM2596HVS
IN+
OUT+
IN−
OUT−
Output=5V
5V
StepDown
U2
J?
Aux1
J28
Aux1
Green
Blue
J12
Serial3
Rear Hoverboard PCB
J13
Serial2
Front Hoverboard PCB
LED_5V
D6
R10
330
LED_3V3
D7
R11
220
C2
100uF
C1
100n
C3
100n
C4
100n
M1
M2
Fan_ESC
Fan
J23
J24
J25
J26
175mA
5V
Q1
BCP56
R6
220
J19
I2C
J10
I2C
black
Yellow
White/Blue
red
Air
ESCRear
ESCFront
GND VDD
DQ
U?
DS18B20
R?
4k7
Temperature Sensors
Sheet: /
File: Bobbycar_wiring.kicad_sch
Title:
Size: A4
Date:
Rev:
KiCad E.D.A. kicad 6.0.11-2627ca5db0~126~ubuntu20.04.1
Id: 1/1